Family Name .....

Given Name .....

Student Number .....

Centre .....

Signature .....

20 June 2012

4204H Appliance Motors and Circuits

Time allowed – One hour Thirty minutes plus Ten minutes reading time

19 Pages in this Question Booklet

TOTAL MARKS AVAILABLE = 100

Aids to be supplied by college:

- None.

Aids to be supplied by student:

- Pen, pencil, eraser, rule, protractor, compass, calculator
- AS/NZS 3000:2007

Section	Possible Marks	Actual Marks
A	25	
B	35	
C	20	
D	20	
Total	100	

Instructions to student:

- **Mobile phones are to be turned off and removed from your person.** You cannot access a mobile phone during this examination.
- *ALL* questions to be attempted.
- *ALL* questions are to be answered in the space provided on this **examination paper**. Answers to Section A – multiple-choice questions, are to be recorded on the Answer Sheet attached to this examination paper.
- You are not to use any other reference books in this examination.
- The whole of this paper is to be handed to the Supervisor upon completion.

Aids permitted where indicated:

Standard Dictionaries	Bilingual Dictionaries	Technical Dictionaries	Programmable Calculators	Non-programmable Calculators
No	No	No	No	Yes

SECTION A – (25 Marks)

Instructions: Select the best answer for the following statements and place an 'X' in the appropriate box on the Answer Sheet attached to the back of this examination paper.

QUESTION 1. (1 Mark)

A four pole 50Hz three phase induction motor operating at a speed of 1440 rpm has a slip % of:

(a) 2%

(b) 4%

(c) 8%

(d) 10%.

QUESTION 2. (1 Mark)

The speed of the stator rotating magnetic field in a 3-phase induction motor is proportional to:

(a) supply voltage

(b) supply current

(c) supply frequency

(d) developed torque.

QUESTION 3. (1 Mark)

An acceptable power factor for an electrical installation would be:

(a) 1.1

(b) 0.9

(c) 0.5

(d) 0.3.

QUESTION 4. (1 Mark)

The starting device for a capacitor start, capacitor run (CSCR) single phase motor disconnects:

(a) the start capacitor and the start winding after starting

(b) the run capacitor after starting

(c) both the start and the run capacitor after starting

(d) the start capacitor after starting.

SECTION A – (Cont'd)

QUESTION 5. (1 Mark)

The rotor of a three phase squirrel cage induction motor requires:

(a) d.c. to be connected

(b) resistors to be added

(c) no electrical connection

(d) a three phase supply to be connected to it.

QUESTION 6. (1 Mark)

A wound rotor motor may be readily identified by:

(a) slip rings

(b) copper rotor bars

(c) the way the stator is wound

(d) the terminal block.

QUESTION 7. (1 Mark)

The setting of a thermal overload is adjusted to:

(a) 75% of full load current of the motor

(b) 100% of full load current of the motor

(c) 125% of full load current of the motor

(d) 200% of full load current of the motor.

QUESTION 8. (1 Mark)

Short circuit protection in a motor circuit is provided by:

(a) HRC fuses or Circuit breakers

(b) NTC thermistors

(c) PTC thermistors

(d) thermal overload.

QUESTION 9. (1 Mark)

A three phase motor isolating switch must be capable of interrupting the:

(a) full load current

(b) no load current

(c) the current when the maximum torque occurs

(d) locked rotor current.

SECTION A – (Cont'd)

QUESTION 10. (1 Mark)

The PTC type thermistors used for motor winding protection:

(a) become open circuit when winding temperature increases

(b) increase in resistance when winding temperature increases

(c) become closed circuit when winding temperature increases

(d) decrease in resistance when winding temperature increases.

QUESTION 11. (1 Mark)

The angle of phase displacement between the start and run winding currents of a split phase induction motor is approximately:

(a) 30°

(b) 45°

(c) 90°

(d) 120°.

QUESTION 12. (1 Mark)

A starter that requires only one contactor and usually has an overload attached to the contactor is called a:

(a) reversing starter

(b) DOL starter

(c) soft starter

(d) one contact starter.

QUESTION 13. (1 Mark)

Which of the following is true of an electronically commutated motor?

(a) They have no brushes

(b) They are inefficient at very low speeds

(c) The stator and the rotor have powerful electromagnets

(d) They often prevent manufacturers from meeting their MEPS requirements.

QUESTION 14. (1 Mark)

If a field coil in a series universal motor becomes open circuit, the motor will:

(a) have excessive sparking at the commutator

(b) quickly overheat

(c) run with greatly reduced torque

(d) not run at all.

SECTION A – (Cont'd)

QUESTION 15. (1 Mark)

ONE (1) function of the commutator of a series universal motor is to:

(a) connect the armature coils in parallel with the supply
(b) connect the armature coils in series with the supply
(c) connect the armature coils in parallel with the field coils
(d) connect the armature coils in series with the field coils.

QUESTION 16. (1 Mark)

Special motor protection is required for which two environments?

(a) Subzero and above 50 °C temperature atmospheres
(b) High humidity and corrosive atmospheres
(c) Low humidity and subzero temperature atmospheres
(d) Low humidity and above 50°C temperature atmospheres.

QUESTION 17. (1 Mark)

The device shown in Figure 1 is used in conjunction with split phase motors. The name and purpose of the device is a:

(a) current relay to disconnect the main winding after starting
(b) current relay to connect the start winding for starting
(c) centrifugal switch to disconnect the main winding after starting
(d) centrifugal switch to disconnect the auxiliary after starting.

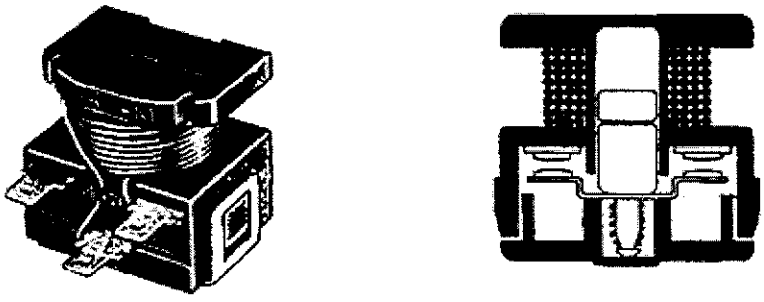

Figure 1

QUESTION 18. (1 Mark)

A capacitor start, capacitor run compressor motor would have the following capacitors fitted:

(a) start 50—80μF@240 V; Run 4—20μF@440 V
(b) start 50—80μF@440 V; Run 4—20μF@240 V
(c) start 30—50μF@240 V; Run 30— 50μF@440 V
(d) start 30—50μF@440 V; Run 30— 50μF@240 V.

SECTION A – (Cont'd)

QUESTION 19. (1 Mark)

The single phase motor most suitable for a domestic fridge compressor is the:

(a) capacitor start, capacitor run motor

(b) split phase motor

(c) universal series motor

(d) shaded pole motor.

QUESTION 20. (1 Mark)

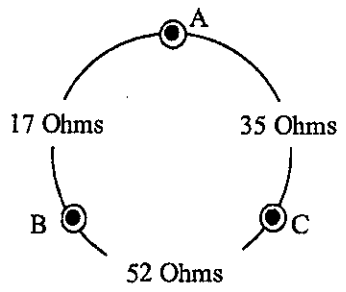

From the motor terminal diagram above, identify the terminals marked A, B and C.

(a) A Start, B = Common, C = Run

(b) A = Run, B = Start, C = Common

(c) A = Common, B = Run, C = Start

(d) A = 'A' Phase, B = 'B' Phase, 'C' = C Phase.

QUESTION 21. (1 Mark)

D.O.L. starters are used as they provide:

(a) non-automatic restart function and fail safe operation

(b) the use of a three phase switch only for on/off control

(c) control over starting current and/or starting torque

(d) reduced voltage and torque at start.

SECTION A – (Cont'd)

QUESTION 22. (1 Mark)

When testing the resistance of the three windings of a three phase induction motor the following results were obtained:

U_0-U_1 =2.1Ω, V_0-V_1 =2.1 Ω, W_0-W_1 =2.1 Ω.

Which statement best describes the condition of the windings?

(a) Some turns of the stator winding are probably short circuited. The motor will run but will burn out soon

(b) The windings need to be connected together to get an accurate assessment. These readings tell us nothing

(c) The windings are all shorted together. A circuit breaker will probably trip if this motor is connected to the supply

(d) The winding resistances meet the criteria for this test.

QUESTION 23. (1 Mark)

The single phase motor most suitable for a room air conditioner compressor is the:

(a) capacitor start, capacitor run motor

(b) shaded pole motor

(c) permanently split capacitor motor

(d) split phase motor.

QUESTION 24. (1 Mark)

The best single phase motor to use on a cement mixer, where high starting and running torque is required and under varying loads would be:

(a) series universal motor

(b) shaded pole motor

(c) split phase motor

(d) capacitor start capacitor-run motor.

QUESTION 25. (1 Mark)

The speed of an induction motor can be varied by:

(a) increasing the load current

(b) decreasing the line current

(c) changing the frequency of the supply

(d) connecting a capacitor in the starting circuit of the motor.

END OF SECTION A

SECTION B – (35 Marks)

Instructions: Blank spaces in the following statements represent omissions. Write the appropriate word, words or information in the space provided.

QUESTION 1. (4 Marks)

For a typical three phase supply in NSW, indicate the values you would expect to find for the following: (1 Mark each)

(a) voltage between any 2 lines: _____

(b) voltage between any line and neutral: _____

(c) voltage between any line and earth: _____

(d) voltage between neutral and earth: _____

QUESTION 2. (2 Marks)

How many electrical degrees is the angle of electrical displacement in a three phase electrical system?

_____

QUESTION 3. (4 Marks)

List four essential electrical tests that should be carried out before switching on the power after you have replaced a three phase motor.

_____

_____

_____

_____

_____

SECTION B – (Cont'd)

QUESTION 4. (4 Marks)

This is a diagram of a three phase open drive electric motor. Place the correct letter for each component in the boxes provided.

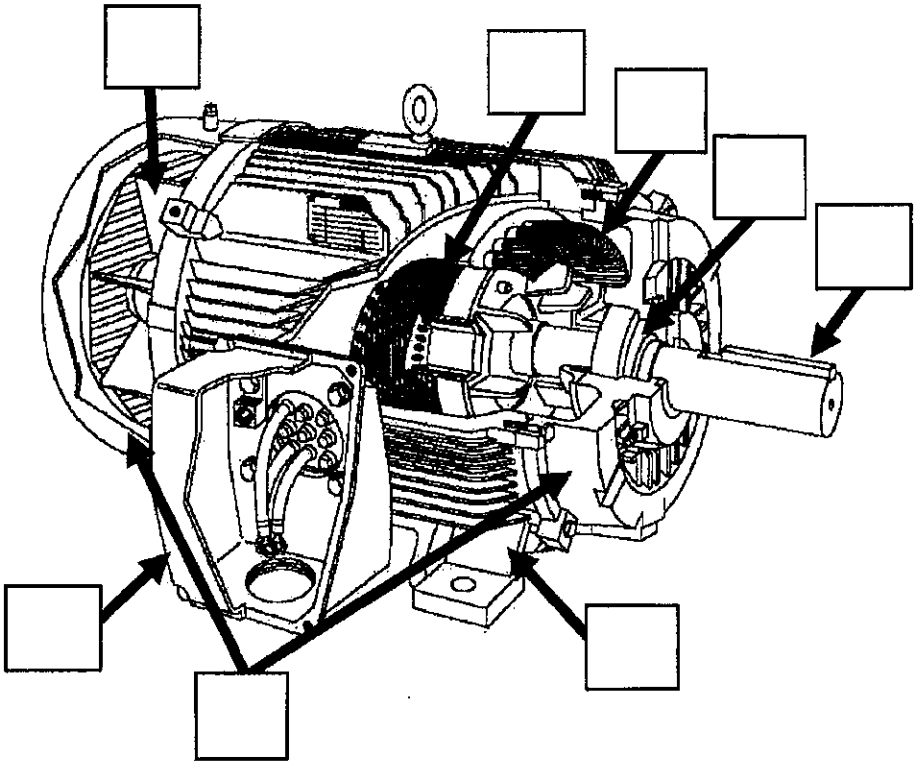

(a) Fan	(e) Housing / Frame / Foot
(b) Rotor	(f) Bearings
(c) Windings	(g) End Shields
(d) Shaft / Shaft Key	(h) Electrical Terminal Block

QUESTION 5. (2 Marks)

What must be done to reverse the direction in which the rotor of a three phase induction motor rotates?

_____

SECTION B – (Cont'd)

QUESTION 6. (2 Marks)

A permanently split capacitor motor main winding has _____ resistance and _____ inductance compared to the auxiliary winding.

QUESTION 7. (2 Marks)

Briefly describe how to reverse the rotation of a shaded pole motor.

_____

_____

_____

QUESTION 8. (6 Marks)

The following diagrams represent 3 phase motor terminal blocks. Complete the diagrams to show correct wiring connections and terminal links as indicated for Star and Delta running.

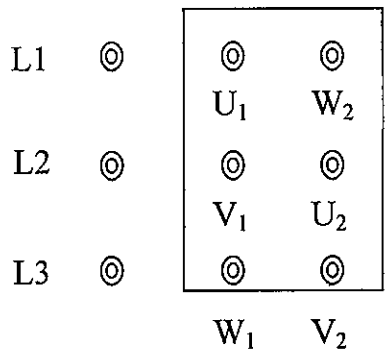

Star Connected

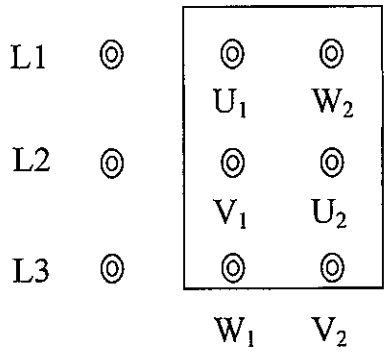

Delta Connected

QUESTION 9. (1 Mark)

Name a typical application for a single phase synchronous motor in the refrigeration/air conditioning industry.

_____

_____

SECTION B – (Cont'd)

QUESTION 10. (6 Marks)

During checking and testing of 3 hermetically sealed compressor/motors, the resistance between the terminals has been determined and noted in the diagrams below. To the right of each labelled diagram, draw in the start and run windings. *Clearly label on the drawings:*

(a) the common.

(b) the start.

(c) the run terminals.

(d) draw in the run and start winding between the three points at the right of the labelled diagrams.

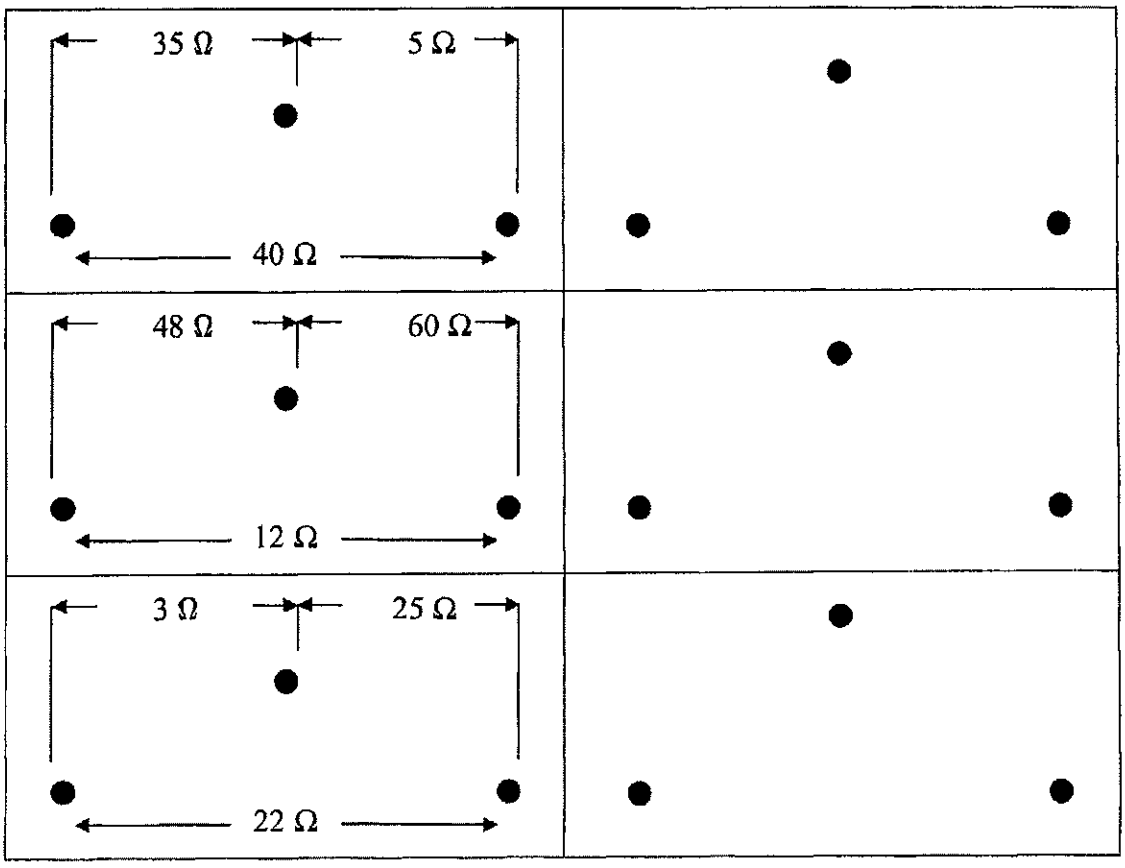

SECTION B – (Cont'd)

QUESTION 11. (1 Mark)

Explain why a capacitor start motor can develop greater starting torque than a split phase motor of similar physical size.

QUESTION 12. (1 Mark)

In a split phase induction motor, does the start or run winding have the higher resistance?

END OF SECTION B

SECTION C – (20 Marks)

Instructions: Answer the following questions in the spaces provided. Marks will be awarded accordingly.

QUESTION 1. (6 Marks)

For the diagram below of a three phase automatic DOL starter and motor, you are to:

(i) Correctly draw in the windings of the motor
(1 Mark)

(ii) Draw in the links (connections) to make the motor operate in a Delta configuration
(1 Mark)

(iii) Neatly draw in the component wiring connections, which will make the motor operate when the start switch is pushed on. You must show the power and control circuits
(4 Marks)

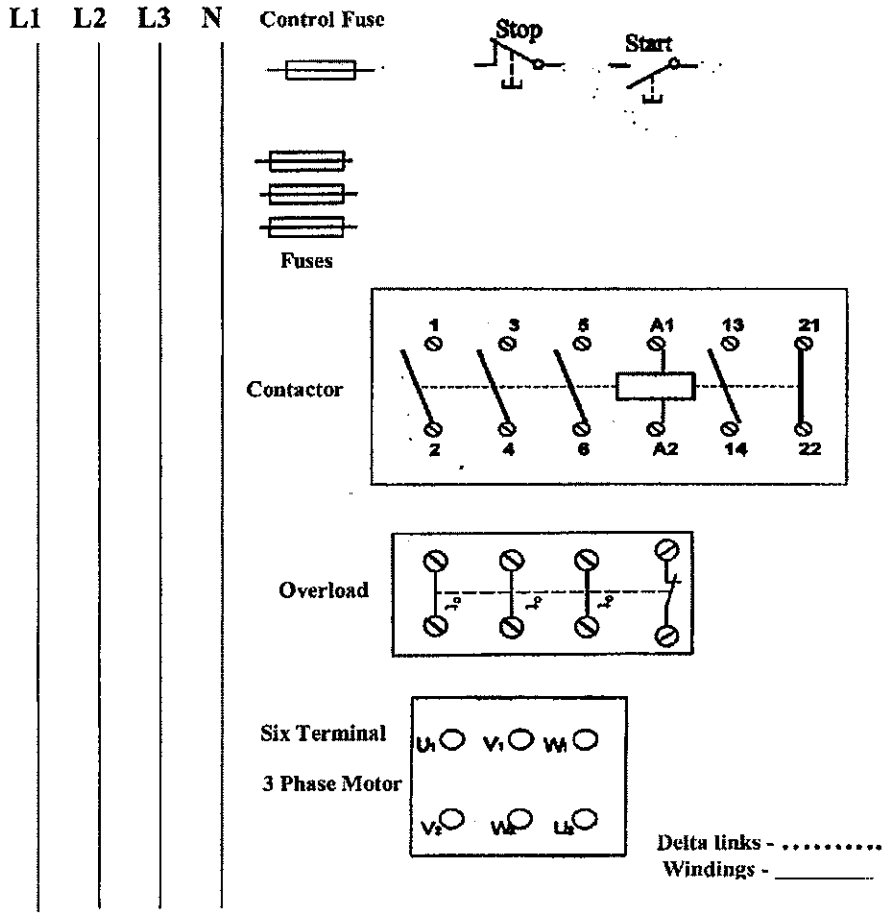

SECTION C – (Cont'd)

QUESTION 2. (3 Marks)

Draw in the appropriate connections and add any components necessary to configure the following motor as a permanently split capacitor (PSC) motor.

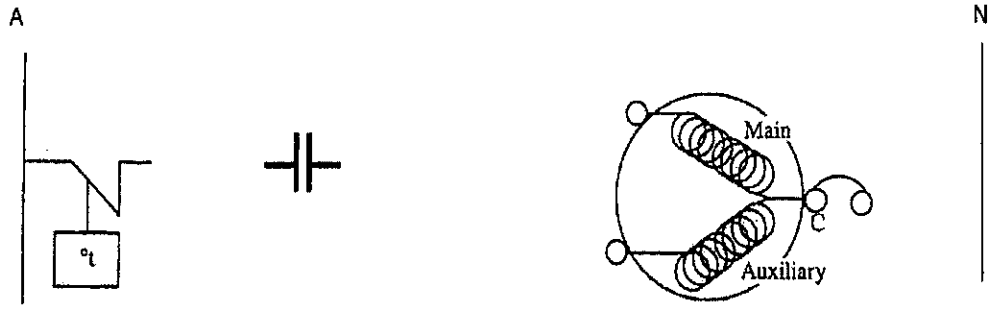

QUESTION 3. (3 Marks)

Draw in the appropriate connections and add any components necessary to configure the following motor as a split phase (RSIR) motor using a current coil relay starting device.

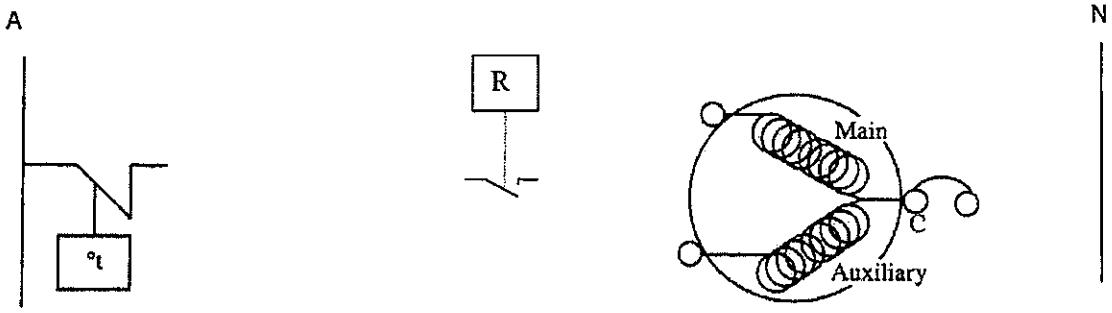

SECTION C – (Cont'd)

QUESTION 4. (4 Marks)

Figure 4 shows the components of a single phase, capacitor start, capacitor run motor. Complete the circuit connections for the motor using the terminals for all terminations between components.

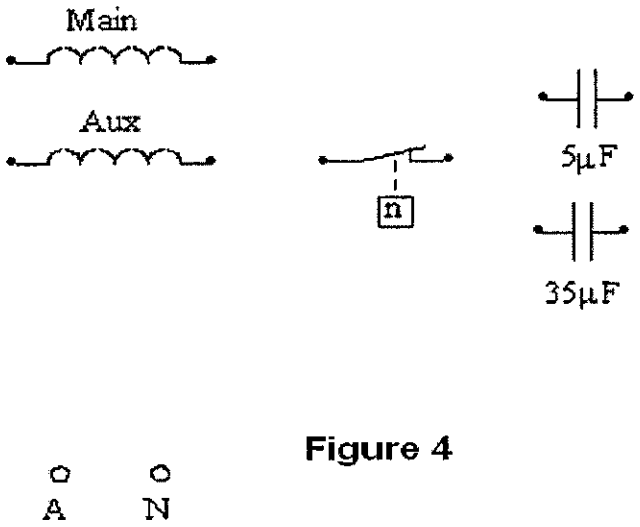

Figure 4

QUESTION 5. (4 Marks)

(i) Identify the type of motor indicated in the following circuit diagram. **(1 Mark)**

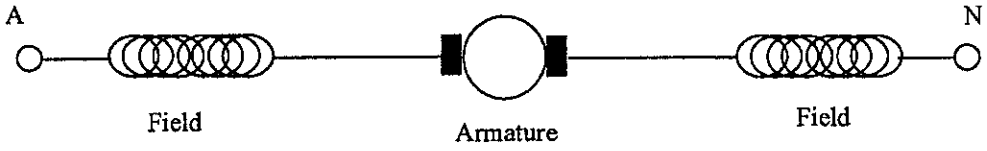

Motor Type: _____

(ii) Redraw the motor circuit diagram showing the connections necessary for the motor to operate in the reverse direction of rotation. **(3 Marks)**

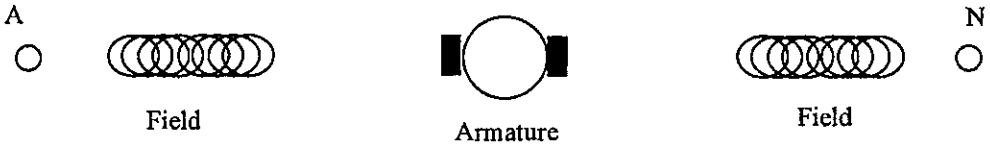

END OF SECTION C

SECTION D – (20 Marks)

Instructions: This section involves calculations. Show all working in the space provided. Marks will be awarded accordingly. Answers are to be highlighted or underlined.

QUESTION 1. (6 Marks)

A 230 volt, six-pole, 50-Hertz, single-phase induction motor operates with a full-load rotor speed of 960 rpm.

(a) Calculate the slip speed.

(b) Calculate the slip%.

QUESTION 2. (3 Marks)

A 15 kW, four-pole, 50-Hertz, three-phase induction motor draws a current of 28 amperes at a power factor of 0.85 when operating at full-load from a 400 volt supply. Calculate the motor efficiency as a percentage.

SECTION D – (Cont'd)

QUESTION 3. (3 Marks)

A 5kw, three phase induction motor is connected to a 50Hz, 415 V supply and has a full load line current of 7.5 amps. Calculate the motor's power factor.

QUESTION 4. (8 Marks)

A three phase, 400 V, 50 Hz, four pole induction motor draws 60 A on full load. If the full load efficiency is 90%, power factor is 0.8 and full load rotor speed is1440 RPM, calculate:

a) Power input.

b) Power output.

END OF SECTION D

NSW GOVERNMENT | TAFE NSW

Family Name .....

Given Name .....

Student Number .....

Centre .....

Signature .....

ANSWER SHEET - SECTION A (Multiple-Choice Questions)

20 June 2012

4204H Appliance Motors and Circuits

Instructions:

- Enter your personal details in the top right hand corner of this sheet.
- Place an **X** in box of your choice. If you make a mistake, circle your answer (X) and choose again.

Question	(a)	(b)	(c)	(d)
1				
2				
3				
4				
5				
6				
7				
8				
9				
10				
11				
12				
13				
14				
15				
Totals				

Question	(a)	(b)	(c)	(d)
16				
17				
18				
19				
20				
21				
22				
23				
24				
25				
Totals				

Total Marks Section A: ..... /25

END OF EXAMINATION

FORMULAE

$P = VI$

$S = VI$

$P = VI\cos\phi$

$I_L = \sqrt{3}I_P$

$P = \frac{V^2}{R}$

$S = \sqrt{3}V_L I_L$

$P = \sqrt{3}V_L I_L \cos\phi$

$I\ phase = I\ line$

$I = \frac{V}{Z}$

$N_{syn} = \frac{120f}{p}$

$s\% = \frac{(n_{syn} - n)}{n_{syn}} \times \frac{100}{1}$

$nslip = nsync - nrotor$

$pf = \frac{true\ power}{apparent\ power}$

$I = \frac{V}{R}$

$V\ phase\ \Delta = V\ line\ \Delta$

$I\ phase = \frac{I\ line}{\sqrt{3}}$